DS-2CD6984G0-IH(S)(AC)(/NFC)
32 MP PanoVu Series Panoramic Dome Camera

Key Features

- 1/2" Progressive scan CMOS
- Max. resolution 8160 × 3616 @ 30 fps in panorama display mode
- Panorama field of view: horizontal FOV 180°, vertical FOV 95°
- Multiple display modes available
  Panorama, original, panorama + ePTZ, and divided panorama
- Four IR LEDs, up to 20 m IR distance
- H.265, H.264
- BLC, 3D DNR, HLC, defog, EIS (only the original mode supports)
- Audio and alarm I/O, optional
- Flexible power supply options
- IP67, IK10

Specifications

Camera		
Image Sensor	1/2" Progressive Scan CMOS	
Min. Illumination	Color: 0.009 Lux @ (F1.2, AGC ON), 0.012 Lux @ (F1.4, AGC ON) B/W: 0.0009 Lux @ (F1.2, AGC ON), 0.0012 Lux @ (F1.4, AGC ON), 0 Lux with IR	
Shutter Speed	1/25 s to 1/100,000 s	
Slow Shutter	No	
Auto-Iris	No	
Day & Night	IR Cut Filter	
Digital Noise Reduction	3D DNR	
WDR	DWDR	
2-Axis Adjustment	Pan: 0° to 355°, tilt: 0° to 90°	
Lens		
Focal length	2.8 mm, four lenses	
Aperture	F1.4	
Focus	No	
FOV	Single lens image: horizontal FOV 102°, vertical FOV 55°, diagonal FOV 120° Panorama Image: horizontal field of view 180°, vertical FOV 95°	
Lens Mount	M12	
IR		
IR Range	Four IR LEDs, up to 20 m	
Wavelength	850 nm	
Compression Standard		
Video Compression	Main stream: H.265/H.264	
H.264 Type	Baseline Profile/Main Profile/High Profile	
H.264+	No	
H.265 Type	Main Profile	
H.265+	No	
Video Bit Rate	32 Kbps to 16 Mbps	
Audio Compression (-S)	G.711/G.722.1/G.726/MP2L2/PCM	
Audio Bit Rate (-S)	64Kbps(G.711)/16Kbps(G.722.1)/16Kbps(G.726)/32-192Kbps(MP2L2)	
SVC	H.264 and H.265 encoding	
Image		
Max. Resolution	8160 × 3616	
Main Stream	Panorama	50Hz: 25fps (8160 × 3616, 8160 × 2304) 60Hz: 30fps (8160 × 3616, 8160 × 2304)
	Original	50Hz: 25fps (3840 × 2160, 3072 × 1728, 2560 × 1440, 1920 × 1080, 1280 × 720) 60Hz: 30fps (3840 × 2160, 3072 × 1728, 2560 × 1440, 1920 × 1080, 1280 × 720)
	Panorama + ePTZ	Panorama channel 50Hz: 25fps (3840 × 2160, 3072 × 1728, 2560 × 1440, 1920 × 1080, 1280 × 720) 60Hz: 30fps (3840 × 2160, 3072 × 1728, 2560 × 1440, 1920 × 1080, 1280 × 720) ePTZ channel 50Hz: 25fps (1920 × 1080, 1280 × 720) 60Hz: 30fps (1920 × 1080, 1280 × 720)
	Divided panorama	50Hz: 25fps (2032 × 3616) 60Hz: 30fps (2032 × 3616)
Image Enhancement	BLC, 3D DNR, HLC, defog, EIS (only the original mode supports)	

Image Settings	Rotate (only the original mode supports), saturation, brightness, contrast, sharpness, AGC and white balance adjustable by client software or web browser
Day/Night Switch	Day/Night/Auto/Schedule/Triggered by Alarm In (with –S model)
Network	
Network Storage	Support Micro SD/SDHC/SDXC card (128G), local storage and NAS (NFS,SMB/CIFS), ANR
Alarm Trigger	Network disconnected, IP address conflict, illegal login, HDD full, HDD error
Protocols	TCP/IP, ICMP, HTTP, HTTPS, FTP, DHCP, DNS, DDNS, RTP, RTSP, RTCP, PPPoE, NTP, UPnP, SMTP, SNMP, IGMP, 802.1X, QoS, IPv6, UDP, Bonjour
General Function	One-key reset, anti-flicker, heartbeat, mirror, password protection, watermark, IP address filter (only the original mode supports)
Firmware Version	V5.5.70
API	ONVIF (PROFILE S, PROFILE G), ISAPI
Simultaneous Live View	Up to 20 channels
User/Host	Up to 32 users 3 levels: Administrator, Operator and User
Client	iVMS-4200
Web Browser	IE8+, Chrome 31.0-44, Firefox 30.0-51, Safari 8.0+
Interface	
Audio I/O (-S)	1 Input (line in), 1 output (line out), mono sound
Communication Interface	1 RJ45 10M/100M/1000M self-adaptive Ethernet port -S: 1 RS-485
Alarm (-S)	2 Inputs, 2 outputs (max. 12 VDC, 1 A)
On-board Storage	Built-in micro SD/SDHC/SDXC slot, up to 128 GB
Reset Button	Yes
Audio (-S)	
Environment Noise Filtering	Yes
Audio Sampling Rate	8kHz/16kHz/32kHz/44.1kHZ/48kHz
General	
Operating Conditions	-40 °C to +60 °C (-40 °F to +140 °F), humidity 95% or less (non-condensing)
Power Supply	Non-AC: 12 VDC±20%, three-core terminal block, PoE (802.3at), class 4 -AC: 24 VAC±20%, three-core terminal block, PoE (802.3at), class 4
Power Consumption and Current	Non-AC: 12 VDC, 1.4 A, max. 17 W, PoE (802.3at, 42.5 V to 57V), max. 23 W -AC: 24 VAC, 1.2 A, 50Hz, PoE (802.3at, 42.5 V to 57 V), max. 23 W
Protection Level	IP67, IK10
Material	Aluminum alloy & plastic
Dimensions	Camera: 190 × 207 × 208 mm (7.5" × 8.2" × 8.2") Package: 336 × 261 × 293 mm (13.2" × 10.3" × 11.5")
Weight	Approx. 3.5 kg (7.7 lb.)

Available Model

DS-2CD6984G0-IH(2.8mm), DS-2CD6984G0-IHS(2.8mm), DS-2CD6984G0-IHSAC(2.8mm), DS-2CD6984G0-IHAC(2.8mm), DS-2CD6984G0-IHS/NFC(2.8mm), DS-2CD6984G0-IHSAC/NFC(2.8mm)

**-S: supports 2 alarm inputs, 2 alarm outputs, 1 audio input, 1 audio output, 1 RS-485*

**-AC: supports 24 VAC power input and PoE (802.3at)*

**-NFC: supports optical interface*

Dimension

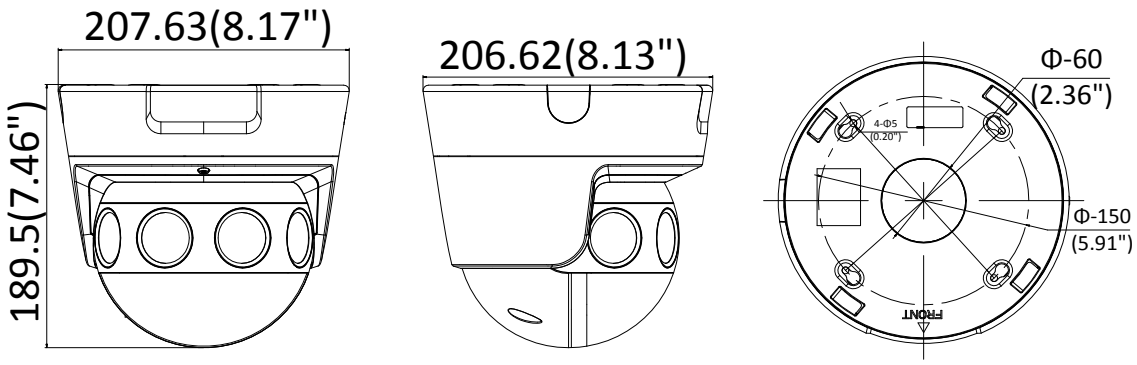

Accessory

Unit: mm

DS-1602ZJ
Wall Mount

DS-1661ZJ
Pendant Mount

Cap (Included)

Distributed by

Headquarters
No.555 Qianmo Road, Binjiang District,
Hangzhou 310051, China
T +86-571-8807-5998
overseasbusiness@hikvision.com

Hikvision USA
T +1-909-895-0400
sales.usa@hikvision.com

Hikvision Europe
T +31-23-5542770
sales.eu@hikvision.com

Hikvision UK & Ireland
T +01628-902140
sales.uk@hikvision.com

Hikvision UAE
T +971-4-4432090
salesme@hikvision.com

Hikvision Russia
T +7-495-669-67-99
saleru@hikvision.com

Hikvision Australia
T +61-2-8599-4233
salesau@hikvision.com

Hikvision Italy
T +39-0438-6902
info.it@hikvision.com

Hikvision South Africa
Tel: +27 (10) 0351172
sale.africa@hikvision.com

Hikvision Singapore
T +65-6684-4718
sg@hikvision.com

Hikvision Korea
T +82-(0)31-731-8817
sales.korea@hikvision.com

Hikvision India
T +91-22-28469900
sales@pramahikvision.com

Hikvision Brazil
T +55 11 3318-0050
Latam.support@hikvision.com

Hikvision France
T +33(0)1-85-330-450
info.fr@hikvision.com

Hikvision Spain
T +34-91-737-16-55
info.es@hikvision.com

Hikvision Poland
T +48-22-460-01-50
info.pl@hikvision.com

Hikvision Canada
T +1-866-200-6690
sales.canada@hikvision.com

Hikvision Turkey
T +90 (216)521 7070- 7074
sales.tr@hikvision.com

Hikvision Kazakhstan
T +7-727-9730667
nikia.panfilov@hikvision.ru

Hikvision Tashkent
T +99-87-1238-9438
uzb@hikvision.ru

Hikvision Indonesia
T +62-21-2933759
Sales.Indonesia@hikvision.com

Hikvision Thailand
T +662-275-9949
sales.thailand@hikvision.com

Hikvision Malaysia
T +601-7652-2413
sales.my@hikvision.com

Hikvision Vietnam
T +84-974270888
sales.vt@hikvision.com

Hikvision Hong Kong
T +852-2151-1761
info.hk@hikvision.com

Hikvision Colombia
sales.colombia@hikvision.com

© Hikvision Digital Technology Co., Ltd. 2018 | Data subject to change without notice | **05057020181112**